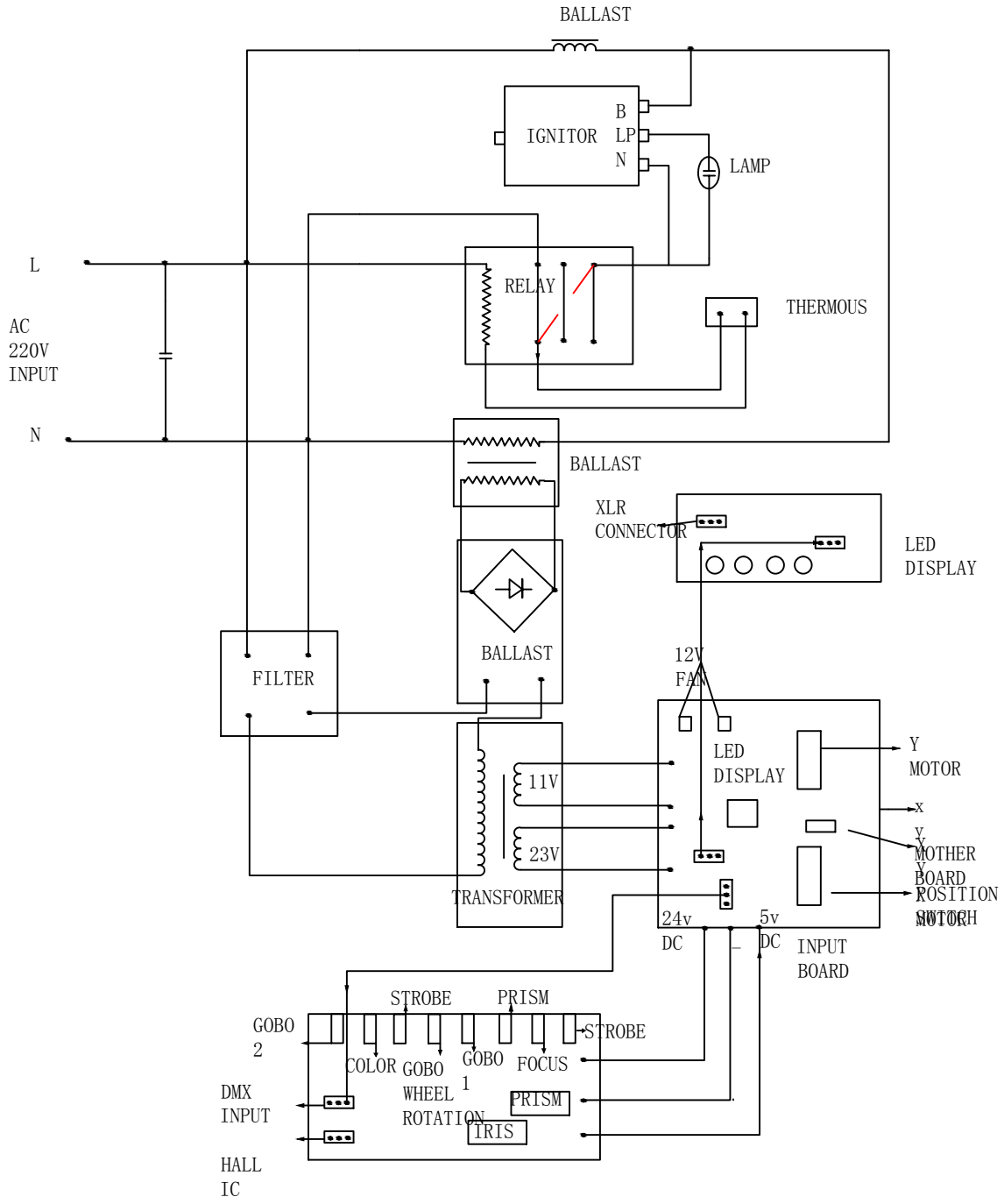
BALLAST
IGNITOR
B
LP
N
LAMP
L
RELAY
THERMOUS
AC
220V
INPUT
N
BALLAST
XLR
CONNECTOR
LED
DISPLAY
BALLAST
FILTER
12V
FAN
LED
DISPLAY
Y
MOTOR
x
y
y
y
MOTHER
BOARD
ROSITION
SWITCH
MOTOR
11V
23V
TRANSFORMER
24v
DC
5v
DC
INPUT
BOARD
STROBE
PRISM
GOBO
2
STROBE
COLOR
GOBO
WHEEL
ROTATION
GOBO
1
FOCUS
PRISM
IRIS
DMX
INPUT
HALL
IC